Biol Invasions (2011) 13:635–650
DOI 10.1007/s10530-010-9854-0

ORIGINAL PAPER

Comparative phylogeography of two colonial ascidians reveals contrasting invasion histories in North America

Christophe Lejeusne · Dan G. Bock · Thomas W. Therriault · Hugh J. MacIsaac · Melania E. Cristescu

Received: 25 November 2009 / Accepted: 16 August 2010 / Published online: 28 August 2010
© Springer Science+Business Media B.V. 2010

Abstract Surveys of genetic structure of introduced populations of nonindigenous species may reveal the source(s) of introduction, the number of introduction events, and total inoculum size. Here we use the mitochondrial cytochrome *c* oxidase subunit 1 (COI) gene to explore genetic structure and contrast invasion histories of two ecologically similar and highly invasive colonial ascidians, the golden star tunicate *Botryllus schlosseri* and the violet tunicate *Botrylloides violaceus*, in their global and introduced North American ranges. Haplotype and nucleotide diversities for *B. schlosseri* were significantly higher than for *B. violaceus* both globally ($h = 0.872$; $\pi = 0.054$ and $h = 0.461$; $\pi = 0.007$, respectively) and in their overlapping North American ranges ($h = 0.874$; $\pi = 0.012$ and $h = 0.384$; $\pi = 0.006$, respectively). Comparative population genetics and phylogenetic analyses revealed clear differences in patterns of invasion for these two species. *B. schlosseri* populations on the west and east coasts of North America were seeded from the Pacific and Mediterranean regions, respectively, whereas all North American *B. violaceus* populations were founded by one or more introduction events from Japan. Differences in genetic structure of invasive populations for these species in North America are consistent with their contrasting probable introduction vectors. *B. schlosseri* invasions most likely resulted from vessel hull fouling, whereas *B. violaceus* was likely introduced as a 'fellow traveler' in the shellfish aquaculture trade.

Keywords Nonindigenous species · Mitochondrial DNA · Introduction · Tunicates · *Botryllus schlosseri* · *Botrylloides violaceus*

Electronic supplementary material The online version of this article (doi:10.1007/s10530-010-9854-0) contains supplementary material, which is available to authorized users.

C. Lejeusne · D. G. Bock · H. J. MacIsaac (✉) · M. E. Cristescu
Great Lakes Institute for Environmental Research, University of Windsor, Windsor, ON N9B 3P4, Canada
e-mail: hughm@uwindsor.ca

C. Lejeusne
Wetland Ecology Department, Estación Biológica de Doñana-CSIC, Avenida Américo Vespucio, s/n, 41092 Sevilla, Spain

T. W. Therriault
Fisheries and Oceans Canada, Pacific Biological Station, Nanaimo, BC V9T 6N7, Canada

Introduction

Successful biological invasion requires that nonindigenous species (NIS) successfully transition a series of filters that include transport, release, and establishment (Kolar and Lodge 2001; Colautti and MacIsaac 2004; Lockwood et al. 2005). Typically, only a small proportion of introduced NIS become established and widespread in their new ranges (but see Jeschke and Strayer 2005). Ecological, genetic

and evolutionary processes determine whether an invasion will succeed or fail (Lee 2002; Sakai et al. 2001). For instance, when a NIS population is founded by a single introduction event, and particularly if the inoculum (i.e. propagule pressure) is low, only a subset of the original genetic diversity will be retained (e.g. Cristescu et al. 2001; Ben-Shlomo et al. 2006). Successive bottlenecks can further reduce genetic diversity and limit adaptation potential in the recipient habitat (Sakai et al. 2001; Frankham 2005). However, well known exceptions have been documented (Suarez et al. 1999), illustrating that under certain circumstances NIS can mitigate the negative effects of genetic impoverishment (Roman and Darling 2007). In contrast, multiple introductions from genetically distinct source populations can result in high genetic diversity in the recipient region through admixture, hybridization and introgression, which in turn may facilitate adaptation (Kolbe et al. 2004; Colautti et al. 2005; Roman and Darling 2007; Rius et al. 2008). Therefore, studying the population genetic structure of NIS is essential for understanding their performance in invaded habitats and the evolution of invasiveness (Holland 2000; Roman and Darling 2007). Moreover, identifying source regions, pathways of invasion and the number of introduction events is critical for the identification of potential future invaders and for the development of effective management strategies.

Ascidians have received much attention in North America and Europe as a result of a large number of reported invasions (e.g. Lambert 2007; Rius et al. 2008; Dupont et al. 2009). These species foul submerged natural or artificial substrates (e.g. LeBlanc et al. 2007; Valentine et al. 2007) and adversely affect native and aquaculture species through competition for food and space (e.g. Castilla et al. 2004; Rius et al. 2009). In Canada, established nonindigenous ascidians include three colonial species—the Whangamata sea squirt *Didemnum vexillum*, the golden-star tunicate *Botryllus schlosseri,* and the violet tunicate *Botrylloides violaceus*—and two solitary species—the vase tunicate *Ciona intestinalis* and the clubbed tunicate *Styela clava* (see for example Carver et al. 2006; Locke et al. 2007; LeGresley et al. 2008). While *S. clava* and *B. violaceus* were introduced to North America decades ago, both *C. intestinalis* and *B. schlosseri* likely invaded during the early twentieth century (Carver et al. 2006).

In spite of the marked difference in invasion histories, most introduced ascidians only recently have exhibited explosive population growth. For example, *B. schlosseri* and *B. violaceus* have become increasingly abundant on both coasts of North America (Carver et al. 2006). Both species occur in natural and aquaculture habitats and exhibit wide environmental tolerances (Brunetti et al. 1980; McCarthy et al. 2007; Epelbaum et al. 2009). Natural dispersal may occur *via* short-lived planktonic larvae, while long-distance dispersal likely involves attachment to floating debris, ships' exterior surfaces or aquaculture gear and species (Lambert 2005; Coutts and Dodgshun 2007).

Despite their biological and ecological similarities, *B. schlosseri* and *B. violaceus* have distinct invasion histories. *B. schlosseri* likely originated from the Mediterranean Sea (Berril 1950; Brunetti et al. 1980; Carver et al. 2006) and spread to the Atlantic coast of Europe from Sweden to Portugal, as well as to Australia, New Zealand, Japan, and India (Carver et al. 2006; Meenakshi and Senthamarai 2006). *B. schlosseri* was reported on the east and west coasts of North America prior to the 1830s and the mid-1940s, respectively (Cohen and Carlton 1995). Since then, it has become established from southern California to Alaska (Lambert and Lambert 2003). In contrast, *B. violaceus* originates from East Asia, likely Japan, and has been introduced to Australia, Italy, United Kingdom and the Netherlands (Carver et al. 2006; Gittenberger 2007). Its earliest records in North America are from southern California in the early 1970s and Woods Hole, Massachusetts in 1972 (Fay and Vallee 1979; Carlton 1989).

Mitochondrial markers are useful for detecting phylogeographic patterns, effects of genetic drift, and patterns of isolation by distance due to their high mutation rate, lack of recombination, and reduced effective population size (Avise et al. 1987). The mitochondrial cytochrome *c* oxidase subunit I (COI) gene has been used widely to study the geographic distribution of genetic diversity for both native species (e.g. Cristescu et al. 2001; Lejeusne and Chevaldonné 2006) and NIS such as ascidians (Perez-Portela and Turon 2008; Rius et al. 2008) and zebra mussel (May et al. 2006). In this study, we determine and compare the genetic structure of introduced *B. schlosseri* and *B. violaceus* populations in North America to identify source area(s) and potential vectors that facilitated

their long-distance dispersal. We also explore whether populations are derived from single or multiple introductions and contrast dispersal patterns of these two species in North America. We test the hypothesis that genetic diversity levels and degree of population differentiation reflect the contrasting invasion histories of the two species in North America. We expect high genetic diversity and low population similarity for the older invasion of *B. schlosseri*. Conversely, low genetic diversity and high population similarity is expected for *B. violaceus*, a more recent invader.

Methods

Sampling, DNA extraction and amplification

Botryllus schlosseri and *Botrylloides violaceus* were sampled along the Pacific and Atlantic coasts of North America, as well as from Europe, Japan and Australia (Fig. 1, Table 1). Sampling was undertaken in 2007 and 2008 by SCUBA diving or by excising colonies from submerged ropes and buoys in harbors. A minimal distance of 1 m was maintained between each colony to avoid potential uniclonality. Samples were preserved in 80–95% ethanol and stored at −20°C until analyzed. In order to maximize the quality of DNA extractions, zooids were separated from the tunic using a dissecting microscope. Total genomic DNA was extracted from zooids using Elphinstone et al.'s (2003) protocol.

A fragment of the cytochrome *c* oxidase subunit I (COI) gene was amplified using the LCO1490 and HCO2198 universal primers (Folmer et al. 1994). Amplifications were carried out in a 40 µl reaction volume, with 4 µl of genomic DNA, 1.6 units of BD Advantage™ 2 polymerase (BD Biosciences, Palo Alto, CA), 4 µl of 10× buffer, 0.2 µM of dNTPs, and 0.4 µM of each primer. PCR was performed with an initial denaturing step at 94°C for 3 min, followed by 5 amplification cycles (94°C for 50 s, 45°C for 50 s,

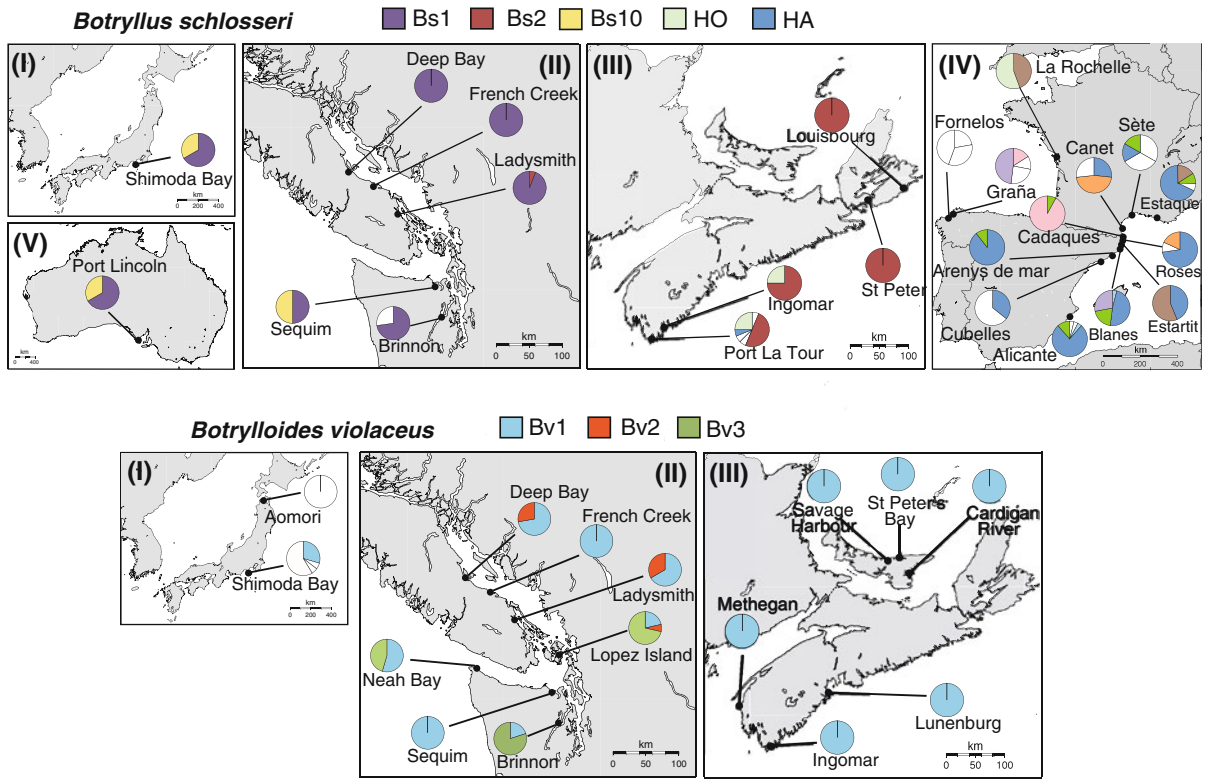

Fig. 1 Locations of sampling sites for *Botryllus schlosseri* (up) and *Botrylloides violaceus* (down). Haplotype frequencies are represented for each of the sampling sites. Haplotypes restricted to one sampling location are uniformly represented in *white*, while haplotypes shared between various locations are *color-coded*

Table 1 Genetic diversity indices for the golden-star tunicate *Botryllus schlosseri* and the violet tunicate *Botrylloides violaceus*

Sampling sites	Geographic region	Haplotype codes	Accession numbers	h (±SD)	π (±SD)
Botryllus schlosseri					
Introduced populations					
Deep Bay, BC[a]	NE Pacific	Bs1 (6)	GQ365696	0.000	0.000
French Creek, BC[a]	NE Pacific	Bs1 (28)	GQ365696	0.000	0.000
Ladysmith, BC[a]	NE Pacific	Bs1 (16)	GQ365696	0.118	0.002
		Bs2 (1)	GQ365697	(0.101)	(0.001)
Brinnon, WA[a]	NE Pacific	Bs1 (8)	GQ365696	0.436	0.008
		Bs8 (3)	GQ365703	(0.133)	(0.005)
Sequim, WA[a]	NE Pacific	Bs1 (3)	GQ365696	0.600	0.018
		Bs10 (3)	GQ365705	(0.129)	(0.011)
Port La Tour, NS[a]	NW Atlantic	Bs2 (8)	GQ365697	0.717	0.022
		Bs4 (1)	GQ365699	(0.099)	(0.012)
		Bs6 (1)	GQ365701		
		Bs7 (1)	GQ365702		
		HA (1)	DQ340205		
		HO (4)	DQ340216		
Ingomar, NS[a]	NW Atlantic	Bs2 (6)	GQ365697	0.429	0.016
		HO (2)	DQ340216	(0.169)	(0.009)
St Peter, NS[a]	NW Atlantic	Bs2 (5)	GQ365697	0.000	0.000
Louisbourg, NS[a]	NW Atlantic	Bs2 (2)	GQ365697	0.000	0.000
Shimoda Bay, Japan[a]	Japan	Bs1 (2)	GQ365696	0.667	0.020
		Bs10 (1)	GQ365705	(0.314)	(0.016)
Port Lincoln, SA[a]	Australia	Bs1 (2)	GQ365696	0.667	0.020
		Bs10 (1)	GQ365705	(0.314)	(0.016)
Native populations					
Blanes, Spain[a,b]	W Medit.	Bs3 (1)	GQ365698	0.677	0.013
		HA (12)	DQ340205	(0.059)	(0.007)
		HC (5)	DQ223767		
		HJ (7)	DQ340211		
Arenys de Mar, Spain[a]	W Medit.	HA (17)	DQ340205	0.199	0.005
		HC (2)	DQ223767	(0.112)	(0.003)
Alicante, Spain[a]	W Medit.	Bs3 (1)	GQ365698	0.406	0.008
		Bs5 (1)	GQ365700	(0.116)	(0.004)
		Bs9 (1)	GQ365704		
		HA (20)	DQ340205		
		HC (3)	DQ223767		
Estartit, Spain[b]	W Medit.	HA (7)	DQ340205	0.525	0.004
		HB (9)	DQ223766	(0.055)	(0.003)
Roses, Spain[b]	W Medit.	HA (8)	DQ340205	0.473	0.075
		HE (1)	DQ340206	(0.162)	(0.040)
		HF (2)	DQ340207		
Canet, France[b]	W Medit.	HA (4)	DQ340205	0.686	0.094
		HF (7)	DQ340207	(0.068)	(0.048)
		HG (4)	DQ340208		

Table 1 continued

Sampling sites	Geographic region	Haplotype codes	Accession numbers	h (±SD)	π (±SD)
Sète, France[a]	W Medit.	Bs11 (2)	GQ365706	0.867	0.092
		Bs12 (2)	GQ365707	(0.129)	(0.054)
		HA (1)	DQ340205		
		HC (1)	DQ223767		
Cubelles, Spain[b]	W Medit.	HA (5)	DQ340205	0.494	0.015
		HK (9)	DQ340212	(0.088)	(0.008)
Estaque, France[a,b]	W Medit.	HA (21)	DQ340205	0.518	0.007
		HB (5)	DQ223766	(0.095)	(0.004)
		HC (3)	DQ223767		
		HP (2)	DQ340217		
Cadaques, Spain[b]	W Medit.	HC (2)	DQ223767	0.153	0.025
		HD (23)	DQ223768	(0.092)	(0.013)
Grana, Spain[b]	NE Atlantic	HD (4)	DQ223768	0.700	0.074
		HH (3)	DQ340209	(0.065)	(0.037)
		HI (6)	DQ340210		
		HJ (12)	DQ340211		
Fornelos, Spain[b]	NE Atlantic	HL (4)	DQ340213	0.680	0.092
		HM (6)	DQ340214	(0.056)	(0.047)
		HN (8)	DQ340215		
La Rochelle, France[b]	NE Atlantic	HB (8)	DQ223766	0.523	0.027
		HO (10)	DQ340216	(0.048)	(0.014)
Total				0.872	0.054
Botrylloides violaceus					
Introduced populations					
Deep Bay, BC[a]	NE Pacific	Bv1 (13)	GQ365691	0.425	0.008
		Bv2 (5)	GQ365692	(0.099)	(0.005)
French Creek, BC[a]	NE Pacific	Bv1 (16)	GQ365691	0.000	0.000
Ladysmith, BC[a]	NE Pacific	Bv1 (12)	GQ365691	0.471	0.009
		Bv2 (6)	GQ36562	(0.082)	(0.005)
Lopez Island, WA[a]	NE Pacific	Bv1 (3)	GQ365691	0.472	0.006
		Bv2 (1)	GQ365692	(0.136)	(0.004)
		Bv3 (10)	GQ365693		
Sequim, WA[a]	NE Pacific	Bv1 (13)	GQ365691	0.000	0.000
Neah Bay, WA[a]	NE Pacific	Bv1 (12)	GQ365691	0.519	0.009
		Bv3 (10)	GQ365693	(0.038)	(0.005)
Brinnon, WA[a]	NE Pacific	Bv1 (3)	GQ365691	0.343	0.006
		Bv3 (12)	GQ365693	(0.128)	(0.004)
Methegan, NS[a]	NW Atlantic	Bv1 (6)	GQ365691	0.000	0.000
Ingomar, NS[a]	NW Atlantic	Bv1 (8)	GQ365691	0.000	0.000
Lunenburg, NS[a]	NW Atlantic	Bv1 (5)	GQ365691	0.000	0.000
Cardigan River, PEI[a]	NW Atlantic	Bv1 (19)	GQ365691	0.000	0.000
Savage Harbour, PEI[a]	NW Atlantic	Bv1 (16)	GQ365691	0.000	0.000
St Peter's Bay, PEI[a]	NW Atlantic	Bv1 (17)	GQ365691	0.000	0.000

Table 1 continued

Sampling sites	Geographic region	Haplotype codes	Accession numbers	h (±SD)	π (±SD)
Native populations					
Aomori, Japan[a]	Japan	Bv7 (3)	GU220388	0.000	0.000
Shimoda Bay, Japan[a]	Japan	Bv1 (5)	GQ365691	0.596	0.003
		Bv4 (1)	GQ365694	(0.099)	(0.001)
		Bv5 (1)	GQ365695		
		Bv6 (10)	GU220387		
Total				0.461	0.007

n sample size, *Nh* number of haplotypes, *Np* number of private haplotypes, *h* haplotypic diversity (with standard deviation SD), π nucleotide diversity (with standard deviation SD)

[a] This study; [b] from Lopez-Legentil et al. (2006)

72°C for 60 s), 30 cycles (94°C for 50 s, 50°C for 50 s, 72°C for 60 s), and a final elongation step at 72°C for 5 min. PCR products were purified using the Solid Phase Reversible Immobilization method (Deangelis et al. 1995). Sequencing reactions were performed on purified PCR products using the BigDye Terminator 3.1 chemistry and an ABI 3130XL automated sequencer (Applied Biosystems, Foster City, CA). Sequences were aligned using CodonCode Aligner 2.0 (CodonCode Corporation, Dedham, MA) and manually edited. *B. schlosseri* sequences from Lopez-Legentil et al. (2006) were added to our dataset (accession numbers: DQ340205 to DQ340217 and DQ223766 to DQ223768).

Genetic analyses

For each species, genetic diversity within species and within populations was characterized by standard diversity indices of haplotype diversity (h) and nucleotide diversity (π) (Nei 1987) calculated in Arlequin 3.0 (Excoffier et al. 2005). Nucleotide sequences were translated into amino acid sequences using the ascidian mitochondrial genetic code. To identify sequences which do not fit the neutral theory model we used Tajima's D statistic implemented in DnaSP 4.10.3 (Rozas et al. 2003).

Population pairwise fixation indices (Φ_{ST}; performed using 10,000 permutations) were calculated in Arlequin 3.0 using the Tamura & Nei (TrN) substitution model, with significance levels adjusted using sequential Bonferroni corrections (Rice 1989). In order to determine the hierarchical structure of COI variation, an analysis of molecular variance (AMOVA) was conducted based on 10,000 random permutations in Arlequin 3.0 (Excoffier et al. 1992). Populations were grouped based on their native/introduced status or their geographical origin. To test for correlation between genetic $[\Phi_{ST}/(1 - \Phi_{ST})]$ and geographic distance (km), we performed Mantel tests with 10,000 permutations implemented in the Isolation-by-Distance Web Service v. 3.16 (Jensen et al. 2005). Geographical distances were calculated as the minimum coastline distances between adjacent sampling locations.

Phylogenetic relationships among mtDNA haplotypes of each species were estimated through the neighbor joining (NJ) and maximum-likelihood (ML) reconstruction methods. PAUP* 4b10 (Swofford 2001) and PhyML 2.4.4 (Guindon and Gascuel 2003) were used to evaluate statistical support for NJ and ML clades, respectively using 1,000 bootstrap replicates. Modelgenerator 0.85 (Keane et al. 2006) was used to determine the best-fit nucleotide substitution model (*Botryllus schlosseri*: TrN + I; *Botrylloides violaceus*: HKY + G) under the Akaike Information Criterion (AIC) and the Bayesian Information Criterion (BIC). To allow accurate inference from sequence data, we chose the congeneric species *Botryllus tyreus* (sequence retrieved from GenBank; accession number: DQ365851) and *Botrylloides fuscus* (GenBank accession number: GQ365690) as outgroups for the phylogenetic reconstructions. For the *B. schlosseri* phylogenetic analyses, we also included nine sequences retrieved from GenBank for which no population frequency data was available, providing us solely with phylogenetic

information. These additional sequences originated from Maine (haplotype BR; accession number DQ367525), Woods Hole, MA (haplotypes HQ, HR, HS; accession numbers: DQ340222 to DQ340224), Vilanova, NE Spain (haplotypes HT, HU; accession numbers: DQ340218 to DQ340219), Palamos, NE Spain (haplotype HW; DQ340220), St-Maries-de-la-Mer, SE France (haplotype HV; accession numbers: DQ340221) and Roscoff, NW France (haplotype ST; accession numbers: AY116601).

A haplotype network was generated for each species dataset using TCS 1.21 (Clement et al. 2000) at the 95% connection limit. The networks were then nested into clades using rules given in Templeton et al. (1987) and Crandall (1996). Although a recent controversy emerged on nested clade analysis (NCA) (Panchal and Beaumont 2007; Petit 2007), this method remains widely used and is considered very useful when interpreted with caution (Templeton 2008; Templeton 2009). Ambiguities in the cladograms were solved according to criteria listed in Pfenninger and Posada (2002). Subsequently, haplotype hierarchical position and geographical distance between locations were incorporated in the NCA using Geodis 2.5 with 10,000 random permutations (Posada et al. 2000). The interpretation of the fit of NCA statistics to expectations from various models of population structure and historical events was performed following the most updated inference key.

To explore the historical demography of populations of each species we used the 'raggedness index', based on mismatch distributions, looking at the fit of the observed mismatch distribution to a model of sudden population expansion (Rogers and Harpending 1992; Schneider and Excoffier 1999). To test if COI evolved in a neutral manner we performed Fu's *Fs*-test (Fu 1997) and the R_2-test (Ramos-Onsins and Rozas 2002) implemented in DnaSP 4.10.3 (Rozas et al. 2003).

Results

After alignment and trimming, partial COI gene fragments of 524 and 590 bp were obtained for *Botryllus schlosseri* and *Botrylloides violaceus*, respectively. Both alignments were unambiguous, containing no insertions or deletions, and a neutral model of evolution of each sequence dataset could not be rejected (non-significant Tajima's *D* statistics; $P > 0.10$).

Genetic diversity levels

For *B. schlosseri*, the overall haplotype (h) and nucleotide (π) diversities were estimated at 0.872 and 0.054, respectively. A total of 28 haplotypes were found among the 354 individuals collected from 24 populations (Fig. 1; Table 1) including 12 haplotypes not reported in previous studies (GenBank database; Accession numbers: GQ365696-GQ365707). A total of 141 variable sites (26.91%) were found among the 28 analyzed haplotypes. Most of the nucleotide substitutions were synonymous and restricted to the third codon position. We identified one non-synonymous change, corresponding to the substitution of an isoleucine by a valine. A total of 11 haplotypes were shared between two or more populations (Table 1, Fig. 1). Among them, six were shared between European populations (Bs3, HB, HC, HD, HF, HJ), two between the Pacific populations (Bs1 and Bs10), one between the eastern Pacific (NE Pacific) and western Atlantic (NW Atlantic) coasts (Bs2), and two between the NW Atlantic coast and Europe (HA, HO).

For *B. violaceus*, the overall haplotype (h) and nucleotide (π) diversities were estimated at 0.461 and 0.007, respectively. A total of seven haplotypes (GenBank database; accession numbers: GQ365691-GQ365695 and GU220387-GU220388) were identified among the 207 *B. violaceus* individuals sampled from 13 introduced populations and two native populations (Table 1), with a total of 26 variable sites (4.4%). Most nucleotide substitutions were restricted to the third codon position, showing synonymous changes. A single non-synonymous substitution resulted in the replacement of a threonine by a serine. Among the seven identified haplotypes, three (Bv1, Bv2 and Bv3) were shared by different populations (Fig. 1; Table 1). Haplotype Bv1 was present at high frequencies in all populations and represented a unique haplotype in populations from French Creek and Sequim in the eastern Pacific, and all Atlantic populations. Conversely, haplotypes Bv2 and Bv3 were present only in a few North American populations from the Pacific coast. Four private

Table 2 Analysis of molecular variance (AMOVA) for *Botryllus schlosseri* and *Botrylloides violaceus* using different hypotheses of population grouping

Source of variation	*df*	% Variation	Fixation indices
Botryllus schlosseri			
Among locations without grouping	23	58.53	
Within locations	330	41.47	F_{ST}: 0.585*
Among groups (invasive vs. native)	1	19.69	F_{CT}: 0.197*
Among locations within groups	22	43.40	F_{SC}: 0.540*
Within locations	330	36.91	F_{ST}: 0.631*
Among groups (NE Pac. vs. NW Atl.)	1	51.33	F_{CT}: 0.513*
Among locations within groups	7	7.71	F_{SC}: 0.158*
Within locations	90	40.96	F_{ST}: 0.590*
Among groups (whole Pac. vs. NW Atl. vs. NE Atl.-Med.)	2	18.18	F_{CT}: 0.182*
Among locations within groups	21	44.26	F_{SC}: 0.541*
Within locations	330	37.55	F_{ST}: 0.624*
Botrylloides violaceus			
Among locations without grouping	14	52.49	
Within locations	192	47.51	F_{ST}: 0.524*
Among groups (NE Pac. vs. NW Atl.)	1	27.53	F_{CT}: 0.275*
Among locations within groups	11	24.52	F_{SC}: 0.338*
Within locations	174	47.96	F_{ST}: 0.520*
Among groups (Jap. vs. NE Pac. vs. NW Atl.)	2	24.65	F_{CT}: 0.246*
Among locations within groups	12	32.45	F_{SC}:0.430*
Within locations	192	42.90	F_{ST}:0.571*

F_{SC}, F_{ST}, and F_{CT} are the corresponding Φ-statistics

Pac. Pacific, *Atl.* Atlantic, *Med.* Mediterranean, *Jap.* Japan, *Aus.* Australia

Significant values ($P < 0.05$) are indicated with an asterisk

haplotypes (Bv4, Bv5, Bv6 and Bv7) were restricted to the native range in Japan.

Population genetic structure

For *B. schlosseri*, the exact test of population differentiation based on haplotype frequencies illustrated that haplotype distribution was significantly heterogeneous ($P < 0.05$). Location pairwise comparisons (pairwise Φ_{ST} calculations) revealed that many of the 24 locations sampled globally were not significantly different from one another. This pattern remained consistent when considering only invasive populations, with 91% of comparisons non-significant. The only exceptions were comparisons between Europe and Mediterranean populations in the native range (64% significantly different) and those between NE Pacific and NW Atlantic populations in the invaded range (see Appendix S1 in Supporting Information).

A hierarchical analysis of molecular variance (AMOVA) was conducted to evaluate three possible groupings for *B. schlosseri* populations (Table 2). We tested if sampling sites can be grouped according to their status (introduced versus native) or their geographical location globally (whole Pacific versus NW Atlantic versus NE Atlantic-Mediterranean) and in North America (NE Pacific versus NW Atlantic coasts). Without *a priori* grouping, more variation was attributed among than within populations (58 vs. 41%, respectively; Table 2). *B. schlosseri* populations exhibited strong overall genetic structure ($\Phi_{ST} = 0.585$). The different population groupings produced significant results for each of the variance components (Table 2). Genetic partitioning of *B. schlosseri* can thus be inferred according to the

invasion status of populations and also into three different global groups (Pacific, NW Atlantic and NE Atlantic-Mediterranean), with the greatest amount of variation (>40%) occurring within groups. For the North American invaded range, clear genetic partitioning occurs between the Pacific and Atlantic coasts (53% of variance), with important genetic structuring within populations (41%; Table 2). We observed a significant isolation-by-distance effect at the global scale for *B. schlosseri* populations (log data; Mantel test, $r = 0.156$, $P = 0.026$). A similar pattern was observed for European and NW Atlantic populations (Mantel test, $r = 0.235$, $P = 0.023$), but was not significant for any other population groupings.

B. violaceus populations also exhibited significant heterogeneity with respect to total haplotype distributions (exact test of population differentiation, $P < 0.05$). Most of the significant differentiations were found between the native Shimoda Bay location in Japan and all remaining sampling locations. In the invaded range, most of the location pairwise comparisons (pairwise Φ_{ST}) values were not significantly different (see Appendix S2 in Supporting Information). We tested two hypothetical *B. violaceus* population groupings based on geographical location globally (Japan versus NE Pacific versus Atlantic) and in North America (NE Pacific versus NW Atlantic; Table 2) and found that genetic structure existed among populations (overall $\Phi_{ST} = 0.524$). The two population-grouping hypotheses showed similar results, with most of the variation explained by differences within populations (>42%; Table 2). We found no evidence to support a model of isolation-by-distance for *B. violaceus* across all populations (Mantel test, $P = 0.446$) or for regional groupings of Pacific populations ($P > 0.05$).

Phylogenetic analyses

Phylogenetic reconstructions using neighbor-joining and maximum-likelihood methods showed similar topologies for each species. The 28 *B. schlosseri* haplotypes were grouped in five, deeply divergent and well supported clades (Fig. 3a). While clades I, II, III and IV contained mainly haplotypes recovered in the Mediterranean region, the extensive clade V comprised all North American, Japanese and Australian haplotypes as well as several Mediterranean ones. The *B. schlosseri* parsimony haplotype network, representing a maximum of eight substitution steps, revealed congruent results. A total of eight haplotype groups (cladograms) were identified, including one with a four-level nesting design (cladogram A), one with a three-level nesting design (cladogram B), and six-one-level clades (cladograms C–H; Fig. 2).

For *B. violaceus*, the seven haplotypes (Bv1–Bv7) formed three well-supported clades (Fig. 3b). Haplotypes Bv2 and Bv3 from the NE Pacific formed a monophyletic group with respect to the rest of the haplotypes. The parsimony haplotype network for *B. violaceus*, representing a maximum of 10 substitution steps, showed consistent results (Fig. 2). Phylogeographic inferences issues of the NCA are summarized in Table 3.

Fu's *Fs*-test and the R_2-test, performed to examine the dynamics of population growth for the two botryllid species, could not reject a model of constant size for populations sampled in this study. The only exception was the R_2 test performed for the *B. schlosseri* population sampled at Cadaques, Spain (not shown). However, the lack of consistency with the Fu's *Fs*-test does not permit concluding past population expansion for this location.

Discussion

Comparative analysis of mitochondrial COI sequences of two colonial ascidians, *Botryllus schlosseri* and *Botrylloides violaceus*, revealed contrasting patterns of genetic structure. For *B. schlosseri*, haplotype diversity in the introduced range was relatively high ($h = 0.888$), although diversity was reduced relative to its native range (9 vs. 21 haplotypes, respectively). Lopez-Legentil et al. (2006) reported high levels of nucleotide diversity and unexpectedly low haplotype diversity for *B. schlosseri* populations in Southern Europe, with 16 haplotypes represented in 181 sequences. They interpreted their findings as a lack of intermediate haplotypes, suggesting that European *B. schlosseri* populations were founded by a small number of well-differentiated haplotypes. We found less genetic structure in the introduced range of *B. schlosseri* than in the native range, with all invasive haplotypes belonging to one highly supported and genetically diverse clade (Fig. 3a). This finding strongly supports

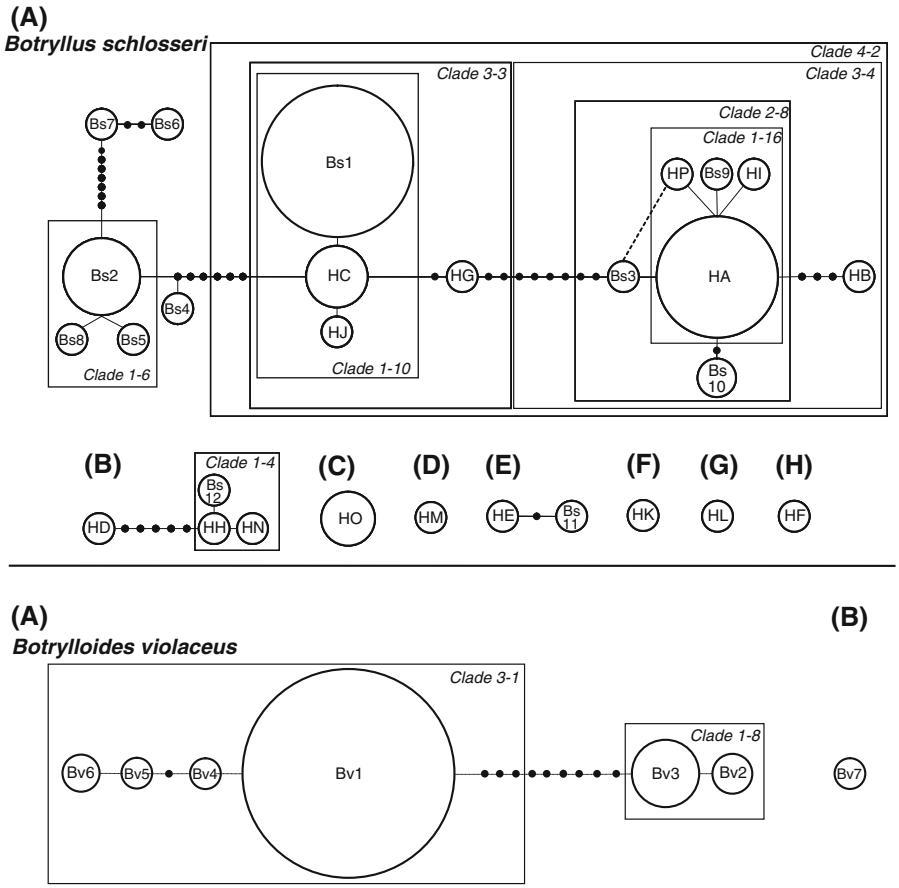

Fig. 2 Nested haplotype network for cytochrome *c* oxidase subunit I (COI) sequences of *Botryllus schlosseri* (up) and *Botrylloides violaceus* (down). For *B. schlosseri*, letters indicate cladograms that could not be unambiguously connected under the criterion of statistical parsimony (95% connection limit between haplotypes representing a maximum of eight and ten substitutions for *B. schlosseri* and *B. violaceus*, respectively). Haplotype labels are written inside the corresponding circle (0-level) and circle size is proportional to the haplotype frequency. Within the network, each line between haplotypes represents a mutational change. *Small black dots* indicate unsampled haplotypes inferred from the data. *Dashed lines* represent removed connections solving loops. *Boxes* indicate nested clades that showed significant results with the nested clade analysis (NCA)

a shared evolutionary history of introduced haplotypes in this species.

For *B. violaceus*, haplotype and nucleotide diversities were substantially lower than for *B. schlosseri* both globally ($h = 0.461$ compared to 0.872 and $\pi = 0.007$ compared to 0.054) and in their overlapping introduced range in North America ($h = 0.384$ compared to 0.874 and $\pi = 0.006$ compared to 0.012). Although we may have underestimated the genetic diversity of *B. violaceus* in its native range, as only two populations and 20 colonies were sampled, low haplotype and nucleotide diversity in North America is suggestive of a recent population bottleneck, most likely the result of the founding process. Similar founder effects have been reported previously for other invasive taxa (e.g. Holland 2000; Roman and Darling 2007).

Contrasting invasion histories

The presence of shared haplotypes among distant geographical locations for both ascidians indicates a recent connection among populations, most likely due to human-mediated dispersal. Stoner et al. (2002) showed that populations of *B. schlosseri* from the east (Maine, Massachusetts, Connecticut) and west coasts

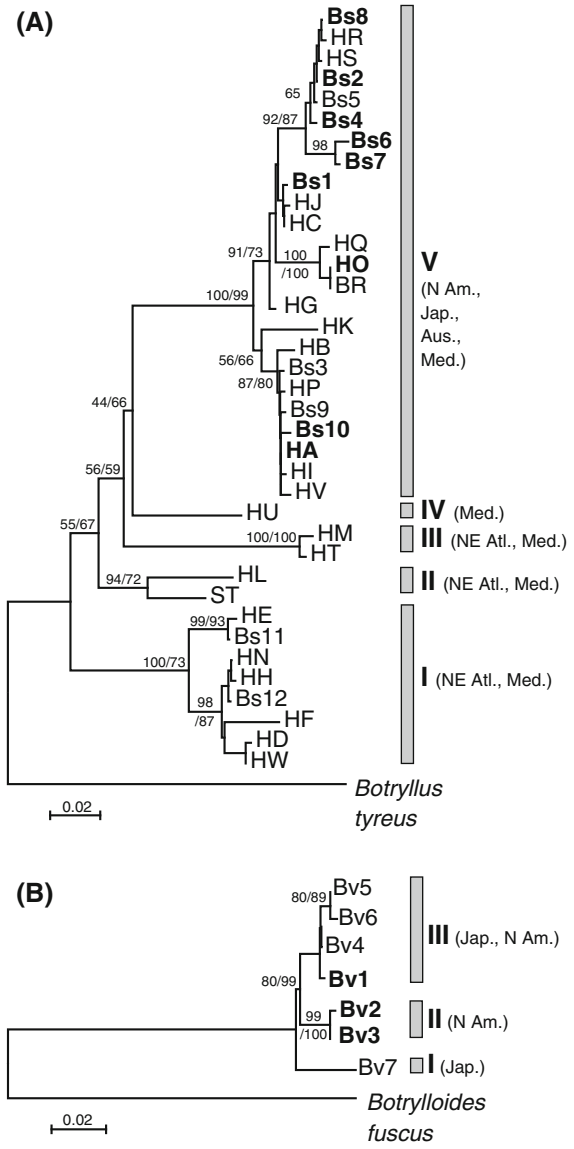

Fig. 3 Neighbor-joining phylogenetic relationships among cytochrome *c* oxidase subunit I (COI) haplotypes of *Botryllus schlosseri* (**a**) and *Botrylloides violaceus* (**b**) using the Tamura and Nei (TrN) substitution model. Numbers at nodes indicate the neighbor-joining and maximum-likelihood bootstrap support with 1,000 replicates. Haplotypes from the invasive range are represented in boldface. Region names of the clades are indicated between brackets. *Med.* Mediterranean, *NE Atl.* North-East Atlantic, *N Am.* North America, *Jap.* Japan, *Aus.* Australia

(California) of the USA had different origins. Our findings support these results, as we observed a clear separation of haplotype occurrence between coasts. Pacific populations shared two haplotypes that were not detected in other locations, whereas Atlantic coast populations were comprised of a different dominant haplotype. This finding suggests that *B. schlosseri* was introduced to North America in multiple events on the Pacific and Atlantic coasts. Gene flow between the two coasts appears highly reduced and related to the occurrence of a unique sequence of the Atlantic-dominant (Bs2) haplotype on the Pacific coast in Ladysmith, British Columbia. This location is a key aquaculture site on the west coast and historically has served as an experimental site for Atlantic species imported to British Columbia for culture. Thus, hitchhiking by *B. schlosseri* would explain the introduction of east coast variants to the region.

The AMOVA results support the grouping of *B. schlosseri* samples into three genetically distinct oceanic entities: two groups in the introduced range (the whole Pacific group and the NW Atlantic group) and one in the native NE Atlantic-Mediterranean range. Within the Pacific range, it appears that two introduction events have occurred: the first involving dispersal of haplotype Bs1 across the Pacific, followed by a secondary event linking Japan, Australia and Sequim, Washington. However, as the Pacific region falls within the introduced range of *B. schlosseri*, it is not possible to determine if these trans-Pacific colonization events were derived from North America, Japan or Australia. For the Northwest Atlantic group, one haplotype (Bs2) was dominant in all populations. Phylogenetic data show a close affinity of this haplotype with other European ones, suggesting that it might be present in an unsampled location. Northwest Atlantic populations had higher overall haplotype diversity as well as some private haplotypes. These populations also shared haplotypes HO and HA with European populations in Port La Tour and Ingomar. Lopez-Legentil et al. (2006) noted that haplotypes sampled from Maine and Massachusetts exhibited high sequence similarity to those in the Northwest Atlantic and Mediterranean. We also found these haplotypes in our Northwest Atlantic populations (Fig. 3a; Table 1). Thus, it appears that the Northwest Atlantic populations resulted from at least two introduction events: one or more directly from Europe, with introduction of HO and HA haplotypes, and one from an unknown geographical origin which introduced haplotype Bs2. Interestingly, we observed a latitudinal gradient in haplotype diversity for Northwest Atlantic populations of

Table 3 Results of the nested clade analysis (NCA) for *Botryllus schlosseri* and *Botrylloides violaceus*

Clade	Chain inference	Inferred population process
Botryllus schlosseri		
Cladogram A		
1-6	1-19-20-2-3-5-15-No	PF and/or LDC
1-10	1-2-3-4-No	RGF with IBD
1-16	1-2-3-5-6-7-Yes	RGF/dispersal but with some LDD
2-8	1-2-3-5-6	RE/colonization or restricted dispersal/gene flow
3-3	1-2-No tip/interior status	Inconclusive outcome
3-4	1-2-11-17	Inconclusive outcome
4-2	1-2-3-4-No	RGF with IBD
Whole cladogram	1-2-No tip/interior status	Inconclusive outcome
Cladogram B		
1-4	1-2-3-5-6	RE/colonization or restricted dispersal/gene flow
Whole cladogram	1-2-No tip/interior status	Inconclusive outcome
Botrylloides violaceus		
1-8	1-2-3-5-6	RE/colonization or restricted dispersal/gene flow
3-1	1-2-3-5-15-No	PF and/or LDC
Whole cladogram	1-2-No tip/interior status	Inconclusive outcome

Only clades representing a significant geographical association are presented

RGF restricted gene flow, *LDD* long distance dispersal, *CRE* contiguous range expansion, *PF* past fragmentation, *RE* range expansion, *IBD* isolation by distance, *LDC* long distance colonization

B. schlosseri, with higher diversity in more southern populations. Such a pattern has been observed in several other introduced species, including the European green crab *Carcinus maenas* (Roman 2006), and might reflect the introduction pathway of *B. schlosseri* since its first introduction into the Gulf of Maine (Dijkstra et al. 2007).

Since its description in Falmouth, England in the late eighteenth century (Pallas 1766), *B. schlosseri* has been considered a species of Mediterranean origin that has achieved worldwide distribution owing to commercial shipping (e.g. Paz et al. 2003; Meenakshi and Senthamarai 2006; LeGresley et al. 2008). However, an alternative hypothesis proposes the Pacific Ocean as the native area of *B. schlosseri*, since this region has been identified as the center of botryllid diversity (Carlton 2005; Lopez-Legentil et al. 2006). This hypothesis contends that the species could have been introduced to Europe as early as the 1500s with Portuguese shipping, followed by subsequent worldwide dispersal. Our phylogenetic and NCA results are inconsistent with this hypothesis. Clades 1–10 and 2–8 of the NCA each include Pacific, Atlantic and Mediterranean haplotypes and both clades have Mediterranean haplotypes in interior positions, whereas Pacific and Atlantic haplotypes are in tip positions (Fig. 2a). Within a nesting category, contrasts of interior versus tip haplotypes (i.e. old vs. younger) constitute a temporal assessment that does not depend upon a molecular clock or any other rate calibration (Templeton 2004). Consequently, Mediterranean haplotypes represent older haplotypes than those in the Pacific or Atlantic. These findings also agree with a microsatellite study of European populations of *B. schlosseri* that indicated the presence of a glacial refuge in Southern Europe during the last ice age from which natural post-glacial northern expansion may have occurred (Ben-Shlomo et al. 2006). Collectively, these findings allow the rejection of the Pacific origin hypothesis.

Haplotype diversity of *B. violaceus* was higher in the NE Pacific than in the NW Atlantic, suggesting that the former may have been the staging area for the subsequent spread of *B. violaceus* in North America. This hypothesis is supported by results from the NCA and AMOVAs, and by historical records of the species' introduction into North America (Carlton 1989). Two of the seven haplotypes were restricted to

Northeast Pacific populations and were not sampled elsewhere. Their position in phylogenetic reconstructions as a well-supported separate clade and their tip positions in the haplotype network (Clade 1–8) suggest that these haplotypes were present but not sampled in the native range (Figs. 2, 3b). Given that only two populations were sampled in the native range, this hypothesis appears likely (see Muirhead et al. 2008), indicating that at least one secondary introduction event occurred in North America apart from the major one from Japan. Clade 1-8 might be due either to range expansion/colonization or to restricted dispersal/gene flow (Table 3). The former hypothesis appears more likely according to the geographic location of haplotypes nested in the clade, as all individuals with Bv2 and Bv3 haplotypes are from five closely spaced Pacific populations including Deep Bay, Ladysmith, Lopez Island, Brinnon and Neah Bay.

Contrasting introduction vectors

Colonial ascidians have lecithotrophic larvae that experience a brief planktonic phase, implying that natural dispersal is likely to occur only at a small geographical scale (Lambert 2005). Thus, the global spread of ascidians has probably not occurred *via* larval transport in ballast water, but rather has resulted from hull fouling and, perhaps to a lesser extent, *via* hitchhiking with aquaculture species (Lambert 2005). Dijkstra et al. (2007) used survey data for invasive ascidians in the Gulf of Maine to suggest that *B. schlosseri* was introduced by hull fouling, whereas the more recent introduction of *B. violaceus* may have resulted from aquaculture activities. Most introduction records of *B. schlosseri* date to pre-World War II, well before the emergence of industrial aquaculture involving extensive shellfish exchanges between distant regions (see Cohen and Carlton 1995; Lambert and Lambert 1998). Conversely, *B. violaceus* records are more recent, spanning the last two decades. Moreover, the species is now abundant in areas with intensive aquaculture industry (Carver et al. 2006; BCMAL 2007; Locke et al. 2007). The species may have been introduced with Japanese oysters from its native area where it is considered a major biofouling species. However, transport by ship fouling cannot be ruled out, as taxonomic confusion might impact introduction records during the pre-aquaculture industry period (Carver et al. 2006).

Conclusions

This study revealed clear differences in patterns of invasion into North America between two ecologically similar colonial ascidians. *B. schlosseri* populations appear to have been seeded from different regions, with west coast populations of Pacific origin and east coast ones of Mediterranean origin. Conversely, *B. violaceus* populations appear to have been founded by at least one main introduction event from Japan. Differences in genetic structure in introduced ranges in North America are consistent with contrasting historical introduction records and possible vectors of introduction. The first records of introduced populations of *B. schlosseri* are relatively old worldwide, increasing the possibility of multiple introductions over time. These different introduction events across North America and other areas reflect spatial and temporal variation in the intensity of international maritime traffic (Carlton and Geller 1993; Drake and Lodge 2004). The more recent introduction and faster spread of *B. violaceus* across North America suggest fewer introduction events, and highlights the possible role of inadvertent spread with aquaculture species.

Acknowledgments We acknowledge our Canadian Aquatic Invasive Species Network (CAISN) colleagues G. Arsenault, J. Davidson, J. Hill, and A. Ramsay as well as our global colleagues T. Bolton, P. Chevaldonné, R. Graille, E. Grey, A. Izquierdo-Munoz, B. de Ligondes, S. Lopez-Legentil, J.-M. Nicolas, M. Ruis-Viladomiu, Y. Saito, X. Turon, and B. Vercaemer, who have so generously provided tunicate samples. D. Heath, S. Xu and A. Zhan provided valuable comments on an early draft of the manuscript. We also thank A. Adebayo, K. Laroche and R. Hepburn for assisting with lab work. This work was supported by CAISN, Fisheries and Oceans Canada and by NSERC Discovery grants to MEC and HJM.

References

Avise JC, Arnold J, Ball RM, Bermingham E, Lamb T, Neigel JE, Reeb CA, Saunders NC (1987) Intraspecific phylogeography: the mitochondrial DNA bridge between population genetics and systematics. Annu Rev Ecol Syst 18:489–522

BCMAL (2007) Shellfish aquaculture: current statistics. British Columbia Ministry of Aquaculture and Lands, BC, 108 pp

Ben-Shlomo R, Paz G, Rinkevich B (2006) Postglacial-period and recent invasions shape the population genetics of botryllid ascidians along European Atlantic coasts. Ecosystems 9:1118–1127

Berril NJ (1950) The Tunicata, with an account of British species. Ray Society, London, iii+354pp

Brunetti R, Beghi L, Bressan M, Marin MG (1980) Combined effects of temperature and salinity on colonies of *Botryllus schlosseri* and *Botrylloides leachi* (Ascidiacea) from the Venetian Lagoon. Mar Ecol Prog Ser 2:303–314

Carlton JT (1989) Man's role in changing the face of the ocean: biological invasions and implications for conservation of near-shore environments. Conserv Biol 3:265–266

Carlton JT (2005) Setting ascidian invasions on the global stage. International Invasive Sea Squirt Conference. Woods Hole Oceanographic Institution, Woods Hole

Carlton JT, Geller JB (1993) Ecological roulette—the global transport of nonindigenous marine organisms. Science 261:78–82

Carver CE, Mallet AL, Vercaemer B (2006) Biological synopsis of the colonial tunicates, *Botryllus schlosseri* and *Botrylloides violaceus*. Canadian Manuscript Report of Fisheries and Aquatic Sciences 2747: v+42p

Castilla JC, Guinez R, Caro AU, Ortiz V (2004) Invasion of a rocky intertidal shore by the tunicate *Pyura praeputialis* in the Bay of Antofagasta, Chile. Proc Natl Acad Sci 101:8517–8524

Clement M, Posada D, Crandall KA (2000) TCS: a computer program to estimate gene genealogies. Mol Ecol 9:1657–1659

Cohen AN, Carlton JT (1995) Biological study. Nonindigenous aquatic species in a United States estuary: a case study of the biological invasions of the San Francisco Bay and Delta. A report for the US Fish and Wildlife Service and National Sea Grant College Program. National Technical Information Service, Springfield, p 246

Colautti RI, MacIsaac HJ (2004) A neutral terminology to define 'invasive' species. Divers Distrib 10:135–141

Colautti RI, Manca M, Viljanen M, Ketelaars HAM, Burgi H, MacIsaac HJ, Heath DD (2005) Invasion genetics of the Eurasian spiny waterflea: evidence for bottlenecks and gene flow using microsatellites. Mol Ecol 14:1869–1879

Coutts ADM, Dodgshun TJ (2007) The nature and extent of organisms in vessel sea-chests: a protected mechanism for marine bioinvasions. Mar Pollut Bull 54:875–886

Crandall KA (1996) Multiple interspecies transmissions of human and simian T-cell leukemia/lymphoma virus type I sequences. Mol Biol Evol 13:115–131

Cristescu MEA, Hebert PDN, Witt JDS, MacIsaac HJ, Grigrovich IA (2001) An invasion history for *Cercopagis pengoi* based on mitochondrial gene sequences. Limnol Oceanogr 46:224–229

Deangelis MM, Wang DG, Hawkins TL (1995) Solid-phase reversible immobilization for the isolation of PCR products. Nucleic Acids Res 23:4742–4743

Dijkstra J, Harris LG, Westerman E (2007) Distribution and long-term temporal patterns of four invasive colonial ascidians in the Gulf of Maine. J Exp Mar Biol Ecol 342:61–68

Drake JM, Lodge DM (2004) Global hot spots of biological invasions: evaluating options for ballast-water management. Proc R Soc Lond Ser B Biol Sci 271:575–580

Dupont L, Viard F, Dowell MJ, Wood C, Bishop JDD (2009) Fine- and regional-scale genetic structure of the exotic ascidian *Styela clava* (Tunicata) in southwest England, 50 years after its introduction. Mol Ecol 18:442–453

Elphinstone MS, Hinten GN, Anderson MJ, Nock CJ (2003) An inexpensive and high-throughput procedure to extract and purify total genomic DNA for population studies. Mol Ecol Notes 3:317–320

Epelbaum A, Herborg LM, Therriault TW, Pearce CM (2009) Temperature and salinity effects on growth, survival, reproduction, and potential distribution of two non-indigenous botryllid ascidians in British Columbia. J Exp Mar Biol Ecol 369:43–52

Excoffier L, Smouse PE, Quattro JM (1992) Analysis of molecular variance inferred from metric distances among DNA haplotypes: application to human mitochondrial DNA restriction data. Genetics 131:479–491

Excoffier L, Laval G, Schneider S (2005) Arlequin ver. 3.0: an integrated software package for population genetics data analysis. Evol Bioinform Online 1:47–50

Fay RC, Vallee JA (1979) A survey of the littoral and sublittoral ascidians of southern California, including the Channel Islands. Bull South Calif Acad Sci 70:114–124

Folmer O, Black M, Hoeh W, Lutz R, Vrijenhoek R (1994) DNA primers for amplification of mitochondrial cytochrome c oxidase subunit I from diverse metazoan invertebrates. Mol Mar Biol Biotechnol 3:294–299

Frankham R (2005) Stress and adaptation in conservation genetics. J Evol Biol 18:750–755

Fu Y-X (1997) Statistical tests of neutrality of mutations against population growth, hitchhiking and background selection. Genetics 147:915–925

Gittenberger A (2007) Recent population expansions of non-native ascidians in the Netherlands. J Exp Mar Biol Ecol 342:122–126

Guindon S, Gascuel O (2003) A simple, fast, and accurate algorithm to estimate large phylogenies by maximum likelihood. Syst Biol 52:696–704

Holland BS (2000) Genetics of marine bioinvasions. Hydrobiologia 420:63–71

Jensen JL, Bohonak AJ, Kelley ST (2005) Isolation by distance, web service. BMC Genet 6:13

Jeschke JM, Strayer DL (2005) Invasion success of vertebrates in Europe and North America. Proc Natl Acad Sci 102:7198–7202

Keane T, Creevey C, Pentony M, Naughton T, Mclnerney J (2006) Assessment of methods for amino acid matrix selection and their use on empirical data shows that ad hoc assumptions for choice of matrix are not justified. BMC Evol Biol 6:29

Kolar CS, Lodge DM (2001) Progress in invasion biology: predicting invaders. Trends Ecol Evol 16:199–204

Kolbe JJ, Glor RE, Schettino LRG, Lara AC, Larson A, Losos JB (2004) Genetic variation increases during biological invasion by a Cuban lizard. Nature 431:177–181

Lambert G (2005) Ecology and natural history of the protochordates. Can J Zool 83:34–50

Lambert G (2007) Invasive sea squirts: a growing global problem. J Exp Mar Biol Ecol 342:3–4

Lambert CC, Lambert G (1998) Non-indigenous ascidians in southern California harbors and marinas. Mar Biol 130:675–688

Lambert CC, Lambert G (2003) Persistence and differential distribution of nonindigenous ascidians in harbors of the Southern California Bight. Mar Ecol Prog Ser 259:145–161

LeBlanc N, Davidson J, Tremblay R, McNiven M, Landry T (2007) The effect of anti-fouling treatments for the clubbed tunicate on the blue mussel, *Mytilus edulis*. Aquaculture 264:205–213

Lee CE (2002) Evolutionary genetics of invasive species. Trends Ecol Evol 17:386–391

LeGresley M, Martin J, McCurdy P, Thorpe B, Chang B (2008) Non-indigenous tunicate species in the Bay of Fundy, eastern Canada. ICES J Mar Sci 65:770–774

Lejeusne C, Chevaldonné P (2006) Brooding crustaceans in a highly fragmented habitat: the genetic structure of Mediterranean marine cave-dwelling mysid populations. Mol Ecol 15:4123–4140

Locke A, Hanson JM, Ellis KM, Thompson J, Rochette R (2007) Invasion of the southern Gulf of St. Lawrence by the clubbed tunicate (Styela clava Herdman): potential mechanisms for invasions of Prince Edward Island estuaries. J Exp Mar Biol Ecol 342:69–77

Lockwood JL, Cassey P, Blackburn T (2005) The role of propagule pressure in explaining species invasions. Trends Ecol Evol 20:223–228

Lopez-Legentil S, Turon X, Planes S (2006) Genetic structure of the star sea squirt, *Botryllus schlosseri*, introduced in southern European harbours. Mol Ecol 15:3957–3967

May GE, Gelembiuk GW, Panov VE, Orlova MI, Lee CE (2006) Molecular ecology of zebra mussel invasions. Mol Ecol 15:1021–1031

McCarthy A, Osman RW, Whitlatch RB (2007) Effects of temperature on growth rates of colonial ascidians: a comparison of *Didemnum* sp. to Botryllus schlosseri and Botrylloides violaceus. J Exp Mar Biol Ecol 342:172–174

Meenakshi VK, Senthamarai S (2006) First report on two species of ascidians to represent the genus *Botryllus* Gaertner, 1774 from Indian waters. J Mar Biol Assoc India 48:100–102

Muirhead J, Gray D, Kelly D, Ellis S, Heath D, MacIsaac H (2008) Identifying the source of species invasions: sampling intensity vs. genetic diversity. Mol Ecol 17:431–449

Nei M (1987) Molecular evolutionary genetics. Columbia University Press, New York

Pallas PS (1766) Elenchus zoophytorum sistens generum adumbrationes generaliores et specierum cognitarum succinctas descriptiones cum selectis auctorum synomymis. Varrentrapp, F, Frankfurt, p 539

Panchal M, Beaumont MA (2007) The automation and evaluation of nested clade phylogeographic analysis. Evolution 61:1466–1480

Paz G, Douek J, Mo CQ, Goren M, Rinkevich B (2003) Genetic structure of *Botryllus schlosseri* (Tunicata) populations from the Mediterranean coast of Israel. Mar Ecol Prog Ser 250:153–162

Perez-Portela R, Turon X (2008) Cryptic divergence and strong population structure in the colonial invertebrate *Pycnoclavella communis* (Ascidiacea) inferred from molecular data. Zoology 111:163–178

Petit RJ (2007) The coup de grâce for the nested clade phylogeographic analysis? Mol Ecol 17:516–518

Pfenninger M, Posada D (2002) Phylogeographic history of the snail *Candidula unifasciata* (Helicellinae, Stylommatophora): fragmentation, corridor migration, and secondary contact. Evolution 56:1776–1788

Posada D, Crandall KA, Templeton AR (2000) GeoDis: a program for the cladistic nested analysis of the geographical distribution of genetic haplotypes. Mol Ecol 9:487–488

Ramos-Onsins SE, Rozas J (2002) Statistical properties of new neutrality tests against population growth. Mol Biol Evol 19:2092–2100

Rice WR (1989) Analyzing tables of statistical tests. Evolution 43:223–225

Rius M, Pascual M, Turon X (2008) Phylogeography of the widespread marine invader *Microcosmus squamiger* (Ascidiacea) reveals high genetic diversity of introduced populations and non-independent colonizations. Divers Distrib 14:818–828

Rius M, Pineda MC, Turon X (2009) Population dynamics and life cycle of the introduced ascidian *Microcosmus squamiger* in the Mediterranean Sea. Biol Invasions 11:2181–2194

Rogers AD, Harpending H (1992) Population growth makes waves in the distribution of pairwise genetic differences. Mol Biol Evol 9:552–569

Roman J (2006) Diluting the founder effect: cryptic invasions expand a marine invader's range. Proc R Soc B Biol Sci 273:2453–2459

Roman J, Darling JA (2007) Paradox lost: genetic diversity and the success of aquatic invasions. Trends Ecol Evol 22:454–464

Rozas J, Sanchez-DelBarrio JC, Messeguer X, Rozas R (2003) DnaSP, DNA polymorphism analyses by the coalescent and other methods. Bioinformatics 19:2496–2497

Sakai AK, Allendorf FW, Holt JS, Lodge DM, Molofsky J, With KA, Baughman S, Cabin RJ, Cohen JE, Ellstrand NC, McCauley DE, O'Neil P, Parker IM, Thompson JN, Weller SG (2001) The population biology of invasive species. Annu Rev Ecol Syst 32:305–332

Schneider S, Excoffier L (1999) Estimation of past demographic parameters from the distribution of pairwise differences when the mutation rates vary among sites: application to human mitochondrial. Genetics 152: 1079–1089

Stoner DS, Ben-Shlomo R, Rinkevich B, Weissman IL (2002) Genetic variability of *Botryllus schlosseri* invasions to the east and west coasts of the USA. Mar Ecol Prog Ser 243:93–100

Suarez AV, Tsutsui ND, Holway DA (1999) Behavioral and genetic differentiation between native and introduced populations of the Argentine ant. Biol Invasions 1: 43–53

Swofford DL (2001) PAUP*: phylogenetic analysis using parsimony (*and others methods). Sinauer, Sunderland

Templeton AR (2004) Statistical phylogeography: methods of evaluating and minimizing inference errors. Mol Ecol 13:789–809

Templeton A (2008) Nested clade analysis: an extensively validated method for strong phylogeographic inference. Mol Ecol 17:1877–1880

Templeton AR (2009) Statistical hypothesis testing in intra-specific phylogeography: nested clade phylogeographical analysis vs. approximate Bayesian computation. Mol Ecol 18:319–331

Templeton AR, Boerwinkle E, Sing CF (1987) A cladistic analysis of phenotypic associations with haplotypes inferred from restriction endonuclease mapping. I. Basic theory and an analysis of alcohol dehydrogenase activity in Drosophila. Genetics 117:343–351

Valentine PC, Collie JS, Reid RN, Asch RG, Guida VG, Blackwood DS (2007) The occurrence of the colonial ascidian *Didemnum* sp on Georges Bank gravel habitat—ecological observations and potential effects on ground-fish and scallop fisheries. J Exp Mar Biol Ecol 342:179–181